THREADED ENDS						
VALVE SIZE	DIMENSIONS, INCHES					WEIGHT LBS
	A	B	C	D	E	
1/4	5.00	7.62	2.56	5.00	1/2"	11
3/8	5.00	7.62	2.56	5.00	1/2"	11
1/2	5.00	7.62	2.56	5.00	1/2"	11
3/4	5.00	8.75	2.62	6.87	1"	20
1	5.00	8.75	2.62	6.87	1"	20
* 1 1/4	8.50	16.75	4.00	9.37	2"	68
1 1/2	7.50	16.75	4.00	9.37	2"	68
2	7.50	16.75	4.00	9.37	2"	68

FLANGED ENDS						
VALVE SIZE	FLANGE ANSI	DIMENSIONS, INCHES				WEIGHT LBS
		A_1 ①	B	C_1	D	
1/2	150#	4.75	7.62	4.75	5.00	15
	300#	4.88	7.62	4.87	5.00	18
3/4	150#	4.75	8.75	4.75	6.87	27
	300#	4.88	8.75	4.87	6.87	30
1	150#	4.75	8.75	4.75	6.87	27
	300#	4.88	8.75	4.87	6.87	30
1 1/4	150#	6.50	16.75	6.50	9.37	75
	300#	6.63	16.75	6.62	9.37	81
1 1/2	150#	6.50	16.75	6.50	9.37	78
	300#	6.63	16.75	6.62	9.37	87
2	150#	6.50	16.75	6.50	9.37	84
	300#	6.63	16.75	6.62	9.37	90

① NOT TO ANSI

TOLERANCES

BWE, FE, TRI-C & TUBE END DIM ARE ±1/16"

ALL OTHER DIMENSIONS: ±1/2"

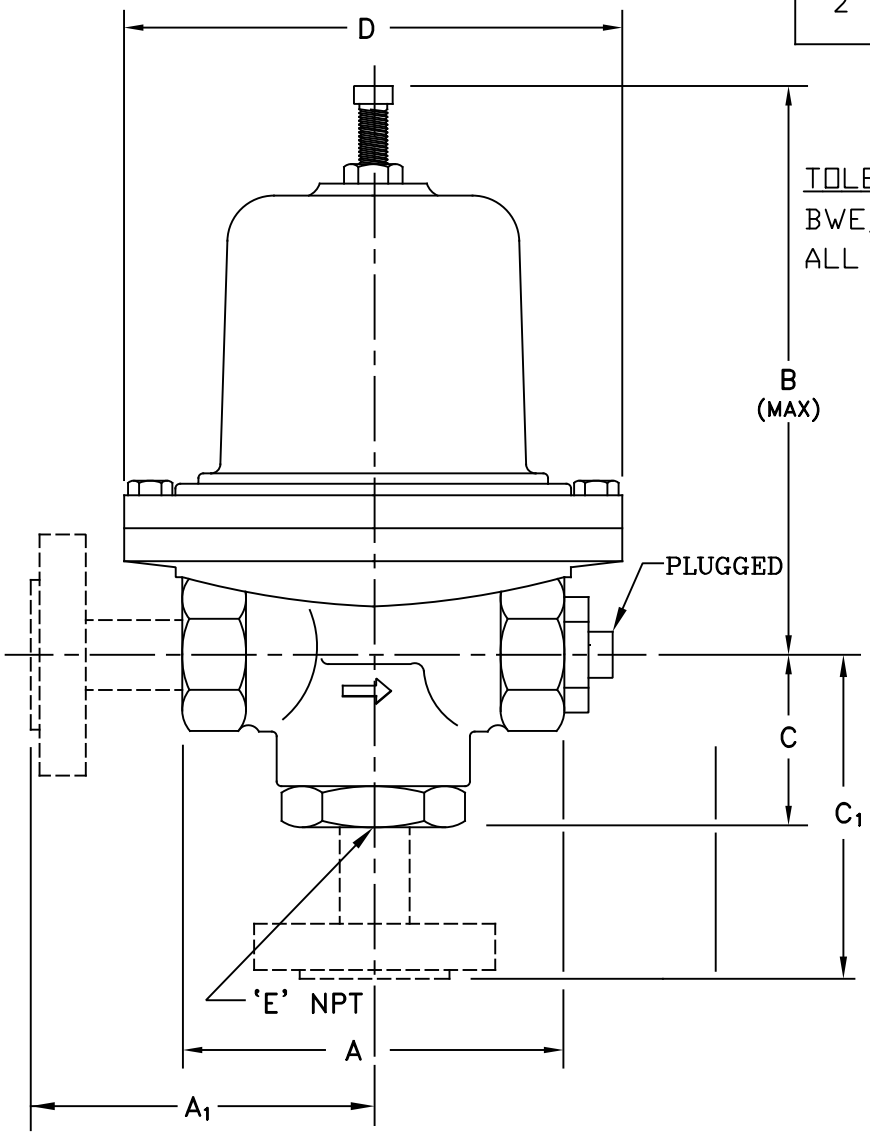

* 1 1/2" BODY WITH 1 1/4" BUSHING

FN: MK58

SPECIFICATION DATA

CUSTOMER _____

ORDER No. _____ SERIAL No. _____

TAG No. _____

VALVE TYPE _____ QTY. _____

BODY _____

END CONN. _____

INLET PRESS. _____ MAX. ΔP _____

PRESS. RANGE _____ SET AT _____

VALVE ACTION: RISE IN PRESSURE TO ☐ OPEN ☐ CLOSE

VALVE SEAT _____ Cv _____

MISC. _____

CERTIFIED _____ DATE _____

RICHARDS INDUSTRIES
CINCINNATI, OHIO
U.S.A.
VALVE GROUP

1/4–2" MARK 58A GLOBE STYLE
BACK PRESSURE REGULATOR

DRAWN BY	DATE
KWM	7/31/12
CHECKED BY	DATE
JJH	Digitally signed by JJH Date: 2024.04.01 08:08:51 -04'00'

MK58A